Smart Door Lock Digit Keyless NFC WiFi APP Bluetooth Door Lock per Home Apart Hotel

Caratteristiche

1- Password di generazione remota APP, la scelta migliore per casa / stanza in affitto

2- Dimensioni: 300 * 76mm

3- Capacità della password: 50 gruppi

4- Scorri: 200 fogli

5- Colore: argento, grigio titanio

6- Modalità di alimentazione: batterie AA da 4 pezzi

7- Grado del cilindro: cilindro di livello C + corpo serratura in acciaio inossidabile

8- Supporta l'APP Bluetooth con un pulsante di sblocco

9- Supporta password di generazione remota su APP

10- Ambito di applicazione: affitto casa / stanza speciale. porta blindata, porta in legno, porta composita, porta tagliafuoco

Specifiche

Modello	**C7-MKA**
Materiale del pannello	lega di zinco
Dimensione del pannello	270 millimetri * 72 millimetri

Sbloccare	APP, password, carta, chiave
Capacità password	50 gruppi
Carta	200 fogli
Cilindro	Nucleo di blocco della lama di livello C.
Serratura da infilare Dimensioni standard	Standard 147mm * 22mm
Bloccare il materiale da infilare	acciaio inossidabile
Alimentazione elettrica	4 batterie AA
Potenza di backup	Con porta USB di backup per ricarica di emergenza
Colore	Argento, grigio titanio, bronzo rosso
Ambito di applicazione	Affitto casa / stanza speciale Porta blindata, porta in legno, porta composita, gruppo porta tagliafuoco

Prodotto Immagini

Bluetooth APP Access
WiFi APP Access
Password
Key
Card
1 2 3
4 5 6
7 8 9
* 0 #
SMART LOCK
www.mvteamcctv.com

www.mvteamcctv.com

Free-Style Handle
Drop-down(open)/Drop-up(lock)
USB charging interface
Hidden keyhole

Multi-Color Selection

Titanium gray

Silver

Red bronze

www.mvtcamcctv.com

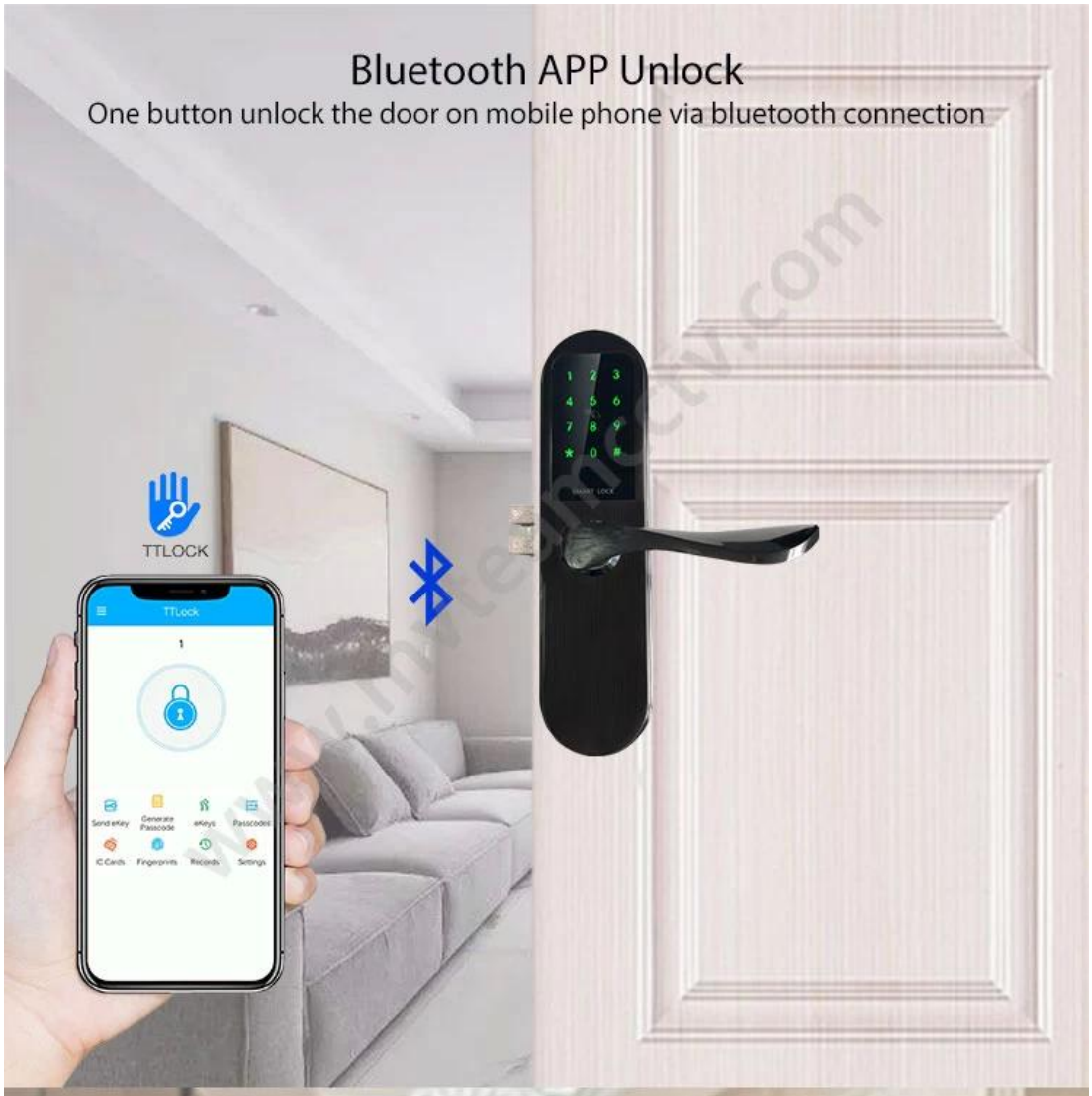
Bluetooth APP Unlock
One button unlock the door on mobile phone via bluetooth connection
TTLOCK
TTLock
Send eKey
Generate Passcode
eKeys
Passcodes
IC Cards
Fingerprints
Records
Settings

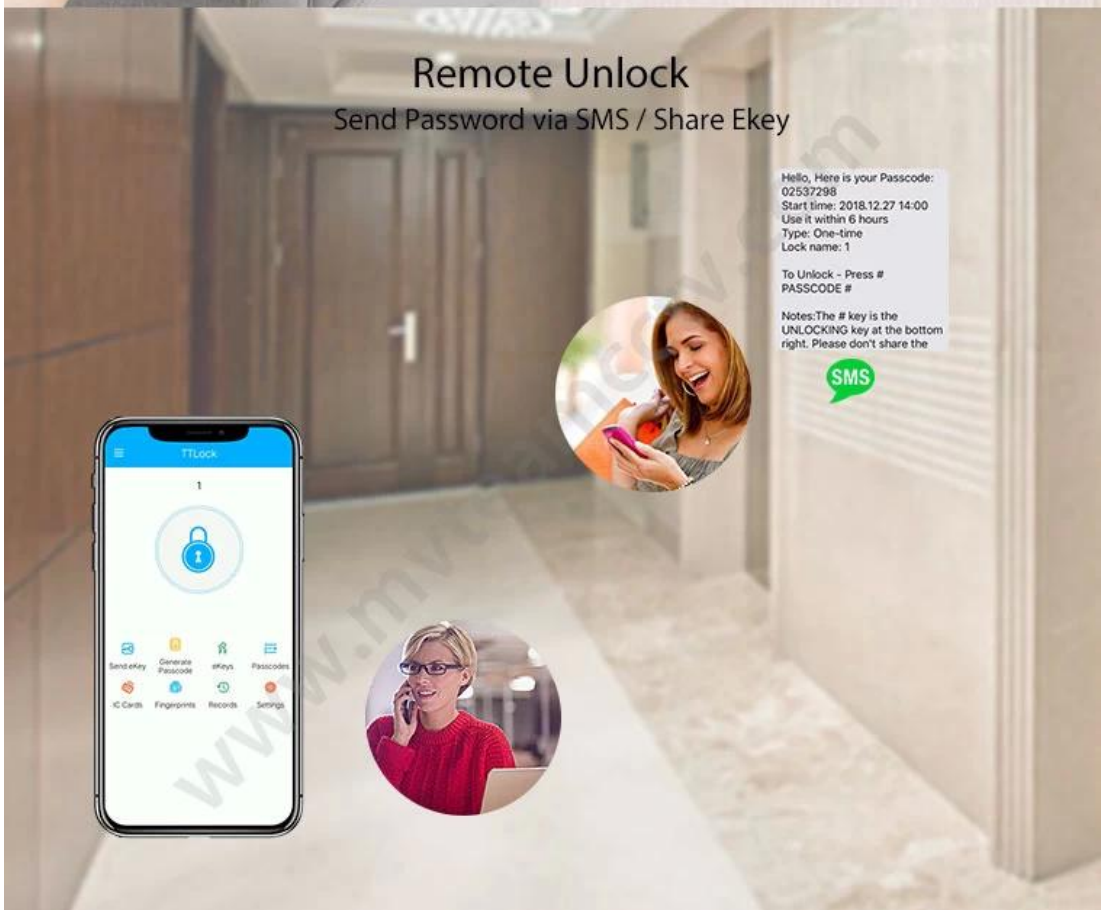
Remote Unlock
Send Password via SMS / Share Ekey
Hello, Here is your Passcode:
02537298
Start time: 2018.12.27 14:00
Use it within 6 hours
Type: One-time
Lock name: 1
To Unlock - Press #
PASSCODE #
Notes:The # key is the UNLOCKING key at the bottom right. Please don't share the
SMS
TTLock
Send eKey
Generate Passcode
eKeys
Passcodes
IC Cards
Fingerprints
Records
Settings

WiFi APP Remote Control

Add a gateway device to connect the smart door lock to WiFi

Achieve Remote Control

- Delete/change the passcode/ekey/fingerprint/ card access remotely.
- Check the update door opening records remotely.

Please note the gateway device is only fit for MVTEAM smart door locks with APP, and the cost is not included in the smart lock price. If you need it, please tell us when purchasing smart door locks, we will add it into your order.

www.mvteamcctv.com

Lock Mortises

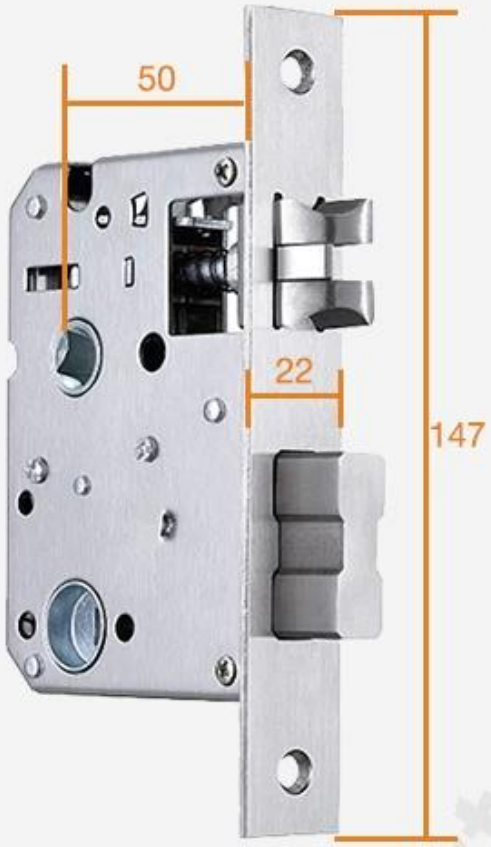

#1

#2

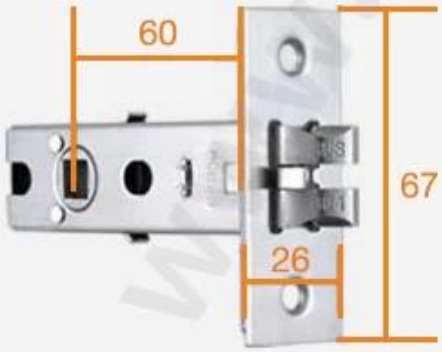

#3

#4

Unit: mm

www.mvteam.com

Power Supply

4 x AA(5 alkaline) batteries,
6 months & 180000 times using.

USB Charge

With backup USB port for
emergency charging.

www.mvteamcctv.com

Warmly notice:
Due to international shipping problem, we will not deliver batteries come with locks.
Please buy 4 section 5-Alkaline batteries by yourself from local market.

Package & Accessories

www.mvteamcctv.com

M'TEAM

Door Opening Direction

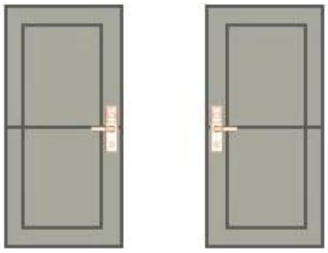

Left Handle Right hadle

Matters needing attention:

There are 4 door types as below drawing showing, Please let us know:

1.what types of the doors?

2.how many quantity per each type?

A Left Handle (push)

B Right Handle (Push)

C Left Handle (pull)

D Right Handle (Pull)

A: left handle push the door to enter the room.

B: left handle pull the door to enter room.

C: right handle push the door to enter the room.

D: right handle pull the door to enter the room.

www.mvteamcctv.com

Are there heaven and earth hook of the door?

How to check?

1. Touch the top edge of the door to check if there are lock holes.
2. When the door lock is in pop up status, check whether there are lock tongues pops out on the top edge of the door.

☐ With bolt ☐ No bolt

www.mvteamcctv.com

Measurement

A Lock side bar length

B Lock side bar width

C Door thickness

D Door frame bar width

E Door frame bar length

Please send above measurement data to us.
We will recommand the correct locks to you.

www.myteamcctv.com

Contattaci

Noi esportare il inteligente porta serrature per tutti al di sopra di il mondo.

In caso di domande o richieste sui prodotti, benvenuto Contattaci.

Ti risponderemo entro 24 ore e ti citeremo i migliori prezzi all'ingrosso.