Sistema inteligente de fechadura da porta Dígito sem chave NFC WiFi APP Bluetooth Door Lock For Home Apart Hotel

Recursos

1- APP senha geradora remota, melhor escolha para aluguel de casa / quarto

2- Tamanho: 300 * 76mm

3- Capacidade da senha: 50 grupos

4- Deslize: 200 folhas

5- Cor: prata, cinza de titânio

6- Modo de fonte de alimentação: 4pcs pilhas AA

7- Classe do cilindro: cilindro de nível C + corpo de trava de aço inoxidável

8- Suporta desbloqueio de um botão do APP Bluetooth

9- Suporte remoto gerando senha no APP

10- Escopo de aplicação: Aluguel de casa / quarto especial. porta de segurança, porta de madeira, porta composta, porta corta-fogo

Especificações

Modelo	**C7-MKA**
Material do painel	Liga de Zinco
Tamanho do painel	270mm * 72mm

Desbloquear	APP, Senha, Cartão, Chave
Capacidade da senha	50 grupos
Cartão	200 folhas
Classe do cilindro	Núcleo de bloqueio da lâmina de nível C
Encaixe o encaixe Tamanho padrão	Padrão 147mm * 22mm
Bloquear material de encaixe	aço inoxidável
Fonte de energia	4pcs pilhas AA
Energia de reserva	Com porta USB de backup para carregamento de emergência
Cor	Prata, Cinza titânio, Bronze vermelho
Âmbito de aplicação	Aluguer de casa / quarto especial Porta de segurança, porta de madeira, porta composta, grupo de portas corta-fogo

produtos As fotos

Bluetooth APP Access
WiFi APP Access
Password
Key
Card
1 2 3
4 5 6
7 8 9
* 0 #
SMART LOCK
www.mvteamcctv.com

www.mvteamcctv.com

Free-Style Handle
Drop-down(open)/Drop-up(lock)
USB charging interface
Hidden keyhole

Multi-Color Selection

Titanium gray

Silver

Red bronze

www.mvtcamcctv.com

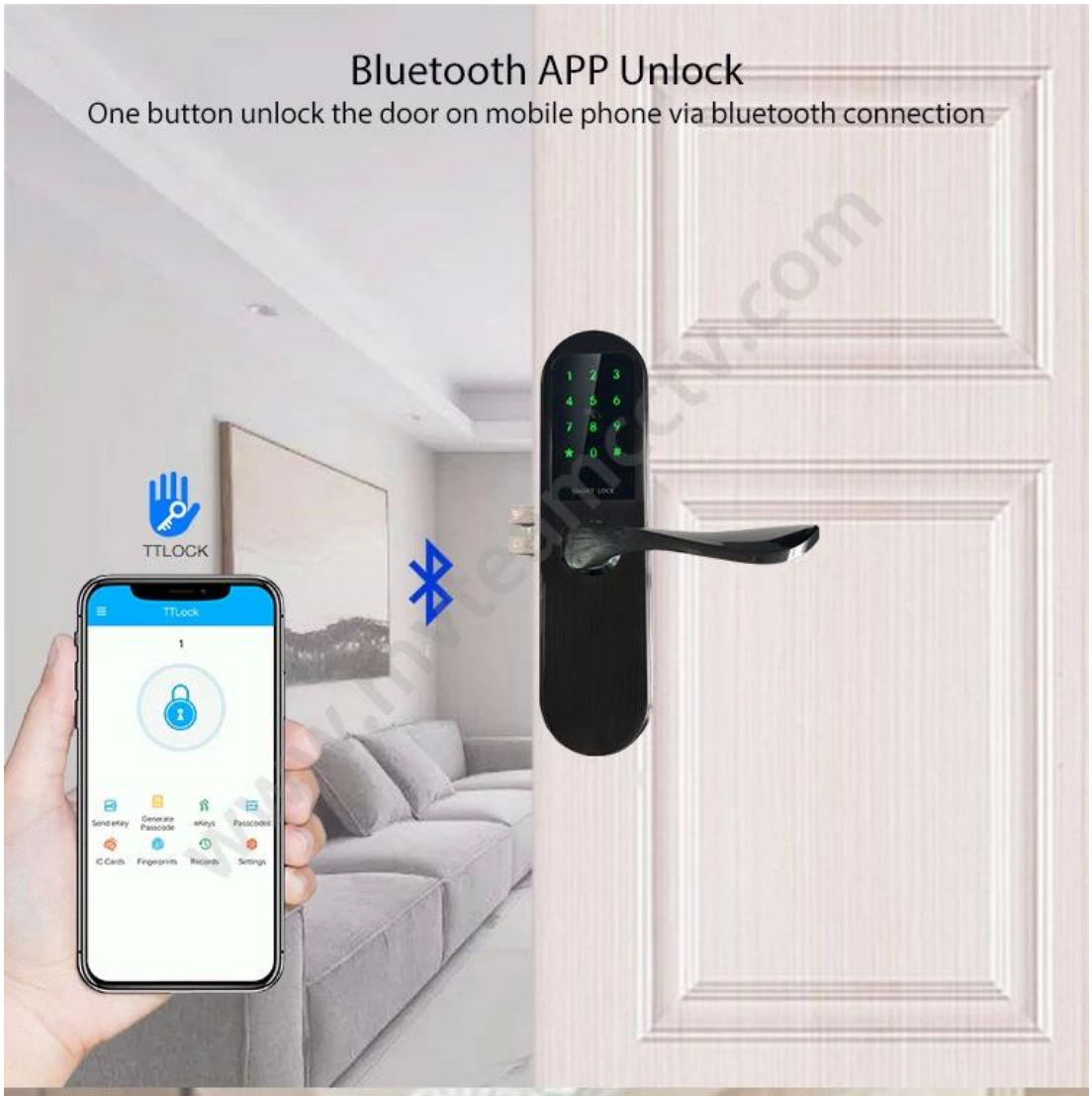
Bluetooth APP Unlock
One button unlock the door on mobile phone via bluetooth connection
TTLOCK
TTLock
Send eKey
Generate Passcode
eKeys
Passcodes
IC Cards
Fingerprints
Records
Settings

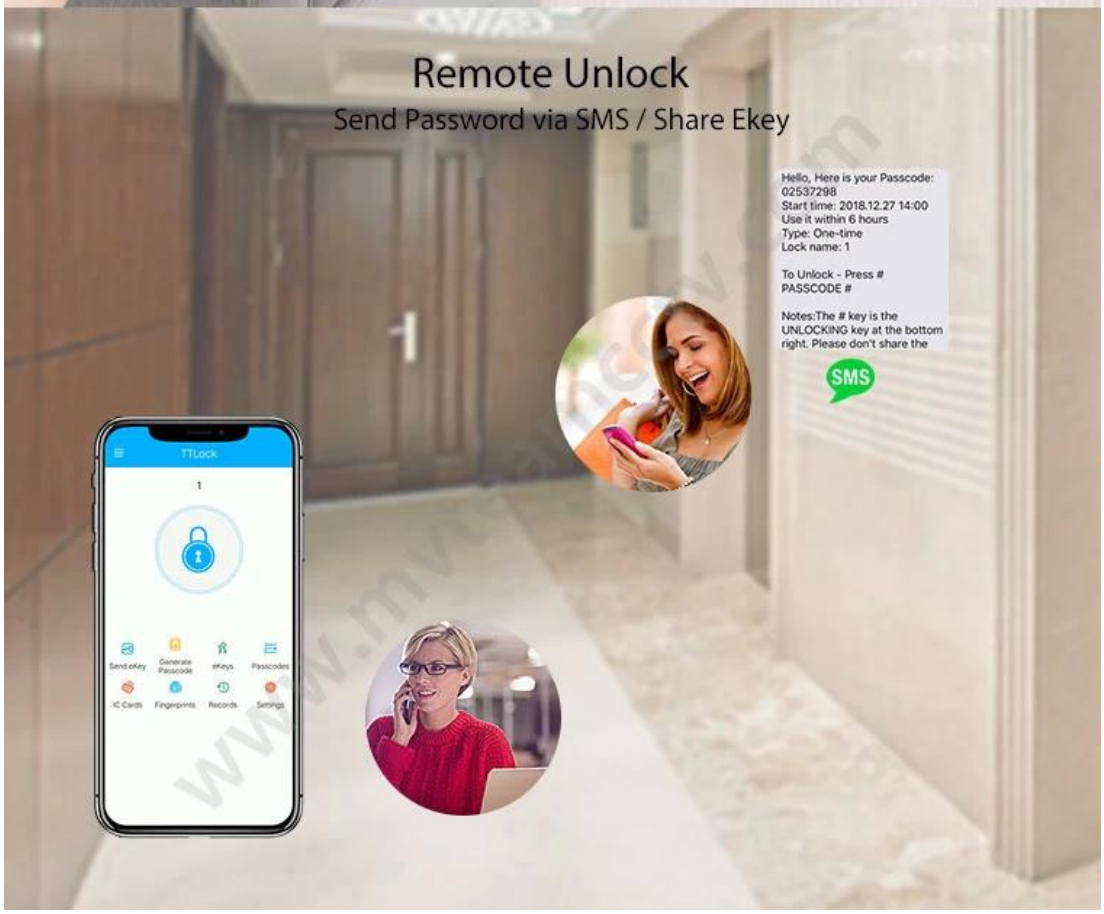
Remote Unlock
Send Password via SMS / Share Ekey
Hello, Here is your Passcode:
02537298
Start time: 2018.12.27 14:00
Use it within 6 hours
Type: One-time
Lock name: 1
To Unlock - Press #
PASSCODE #
Notes:The # key is the UNLOCKING key at the bottom right. Please don't share the
SMS
TTLock
Send eKey
Generate Passcode
eKeys
Passcodes
IC Cards
Fingerprints
Records
Settings

WiFi APP Remote Control

Add a gateway device to connect the smart door lock to WiFi

Achieve Remote Control

- Delete/change the passcode/ekey/fingerprint/ card access remotely.
- Check the update door opening records remotely.

Please note the gateway device is only fit for MVTEAM smart door locks with APP, and the cost is not included in the smart lock price. If you need it, please tell us when purchasing smart door locks, we will add it into your order.

www.mvteamcctv.com

Lock Mortises

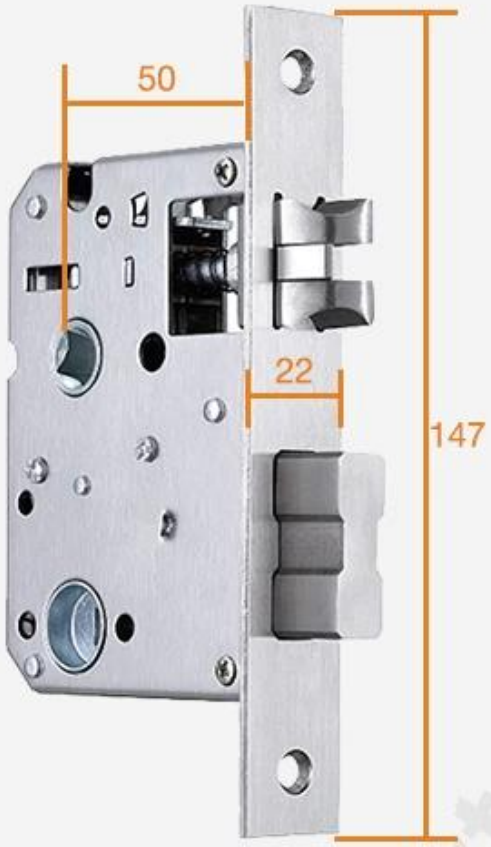

#1

#2

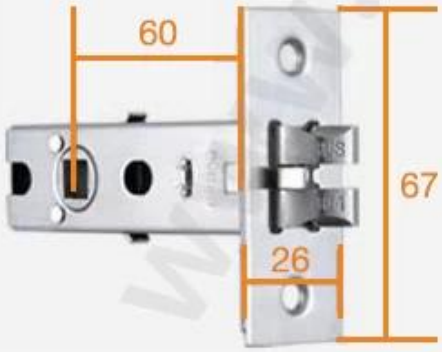

#3

#4

Unit: mm

www.mvteam.com

Power Supply

4 x AA(5 alkaline) batteries,
6 months & 180000 times using.

USB Charge

With backup USB port for
emergency charging.

www.mvteamcctv.com

Warmly notice:
Due to international shipping problem, we will not deliver batteries come with locks.
Please buy 4 section 5-Alkaline batteries by yourself from local market.

Package & Accessories

www.mvteamcctv.com

M'TEAM

Door Opening Direction

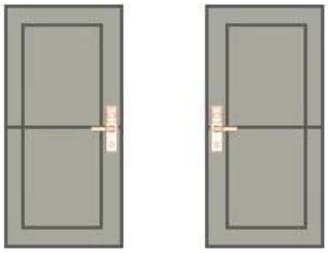

Left Handle Right hadle

Matters needing attention:

There are 4 door types as below drawing showing, Please let us know:

1.what types of the doors?

2.how many quantity per each type?

A Left Handle (push)

B Right Handle (Push)

C Left Handle (pull)

D Right Handle (Pull)

A: left handle push the door to enter the room.

B: left handle pull the door to enter room.

C: right handle push the door to enter the room.

D: right handle pull the door to enter the room.

www.mvteamcctv.com

Are there heaven and earth hook of the door?

How to check?

1. Touch the top edge of the door to check if there are lock holes.
2. When the door lock is in pop up status, check whether there are lock tongues pops out on the top edge of the door.

☐ With bolt ☐ No bolt

www.mvteamcctv.com

Contate-Nos

Nós exportação a Esperto porta fechaduras para tudo sobre a mundo.

Se você tiver alguma dúvida ou pergunta sobre os produtos, bem-vindo ao Contate-Nos.

Nós responderemos você dentro de 24 horas e citaremos os melhores preços de atacado para você.